POWERWAVE
ACCESSORIES

PS5 CHARGING DISPLAY STAND

INSTRUCTIONS

The Powerwave PS5 Charging Display Stand is simple to use with a sleek design. Perfect for charging or displaying your PS5™ controller.

Features

1. Built-in DC voltage stabilizing circuit for more stable charging.
2. Slide-proof rubber pad on the bottom of the charger for more stable placement.
3. Includes one (1) USB-to-Type-C charging cable, compatible with any ports on a PS5™ console.
4. Red LED power indicator.

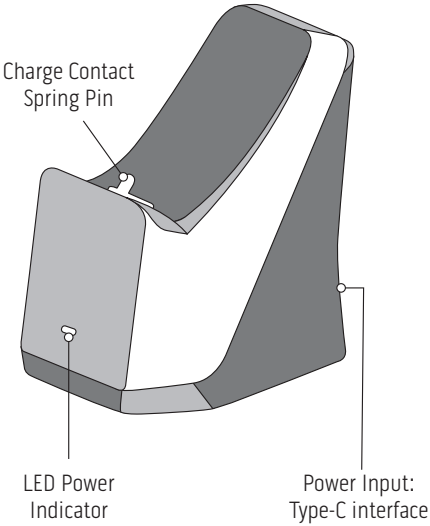

Charging Instructions

1. Connect the charging display stand to your PS5™ console using the USB-to-Type-C charging cable. Plug the USB2.0 male connector into any available USB port in the PS5™ console and the Type-C male connector into the power supply port on the back of the charging display stand. After power is turned on the LED power indicator will be a solid red.

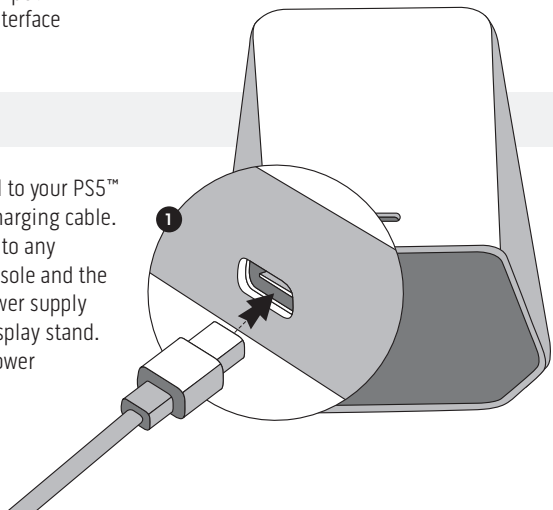

POWERWAVE
ACCESSORIES

PS5 CHARGING DISPLAY STAND

INSTRUCTIONS

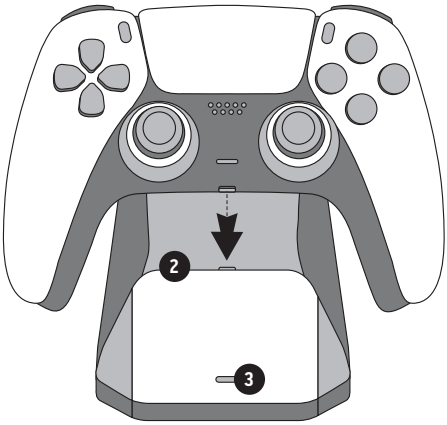

2. Place the PS5™ controller horizontally on the charging display stand with the controller and charging connectors aligned and gently push down. When charging the controller LED light bar will pulse orange.

3. Once fully charged, the LED light bar will turn off and you can disconnect your controller.

Electrical Specifications

1	Rated input voltage/ input current	DC 5.0V
2	Rated output voltage/ output current	DC 5.1V 1.5A
3	Maximum power consumption of standby	≤0.3W
4	Working temperature	5~35
5	Relative temperature	5%~90%

6	Dimensions	85*90*65mm
7	Charging duration	When the controller battery runs out, it takes about 3 hours to complete charging

Product Care and Safety

- Keep your user manual for future reference.
- Use this device solely for its intended purposes. For indoor use only.
- When not in use, store in a cool, dry environment away from direct sunlight.
- Clean the product with a soft, damp cloth to prevent dirt build-up.
  Do not use chemical solvents, detergents or alcohol.
- Do not use external heating equipment such as microwave ovens for drying.
- Keep away from hot surfaces and naked flames.
- Do not apply force or put heavy objects on the product.
- If the product is damaged, broken or immersed in water, stop use immediately.
- Do not attempt to repair, modify or disassemble the product.
- Keep out of reach of small children.